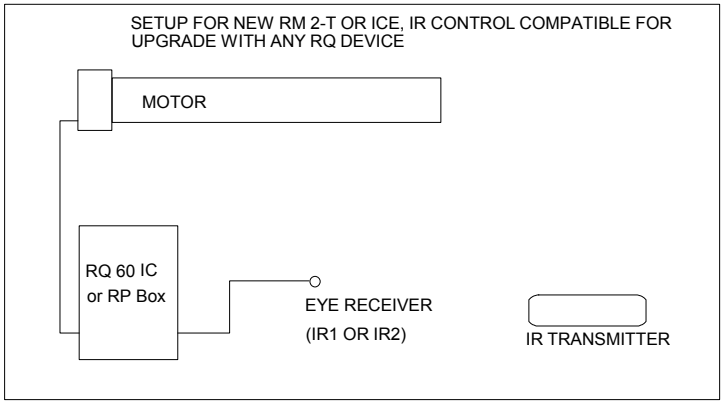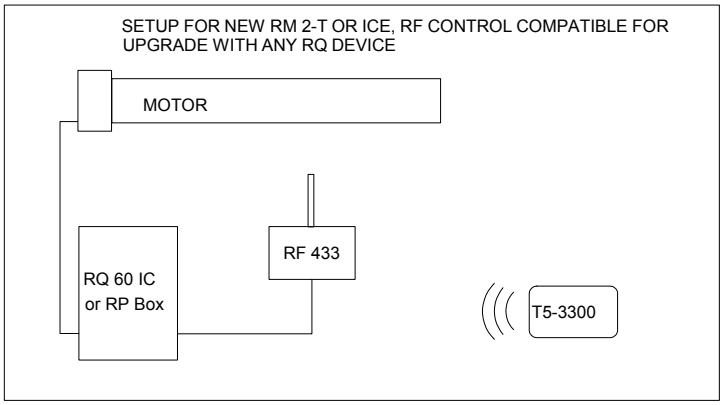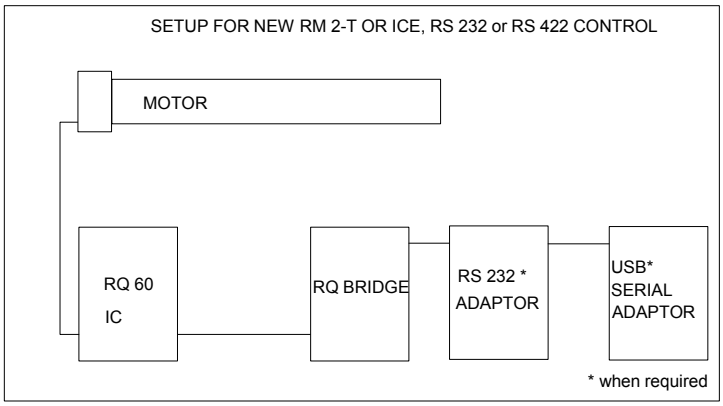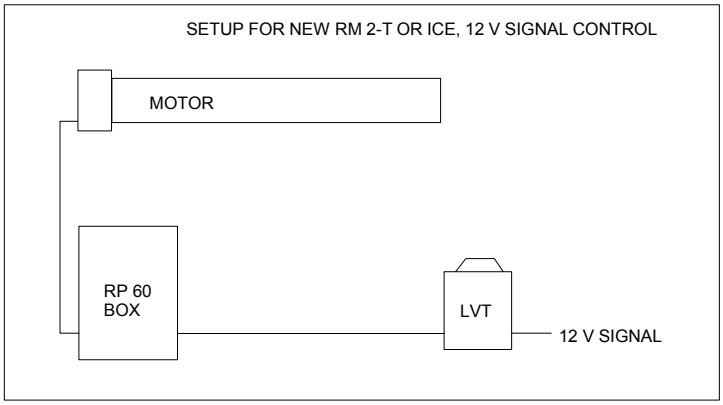ESI CONTROLS FOR ICE or RM2-T